* 0000800000001 *

Cambridge Assessment International Education

Cambridge International AS & A Level

CANDIDATE NAME

CENTRE NUMBER

CANDIDATE NUMBER

* 4 1 1 5 1 8 0 7 4 1 *

PHYSICS **9702/33**

Paper 3 Advanced Practical Skills 1 **May/June 2025**

2 hours

You must answer on the question paper.

You will need: The materials and apparatus listed in the confidential instructions

INSTRUCTIONS

- Answer **all** questions.
- Use a black or dark blue pen. You may use an HB pencil for any diagrams or graphs.
- Write your name, centre number and candidate number in the boxes at the top of the page.
- Write your answer to each question in the space provided.
- Do **not** use an erasable pen or correction fluid.
- Do **not** write on any bar codes.
- You will be allowed to work with the apparatus for a maximum of 1 hour for each question.
- You should record all your observations in the spaces provided in the question paper as soon as these observations are made.
- You may use a calculator.
- You should show all your working and use appropriate units.

INFORMATION

- The total mark for this paper is 40.
- The number of marks for each question or part question is shown in brackets [ ].

For Examiner's Use	
1	
2	
Total	

This document has **12** pages.

© UCLES 2025

[Turn over

You may not need to use all of the materials provided.

1 In this experiment, you will investigate an electrical circuit.

(a) • Set up the circuit shown in Fig. 1.1.

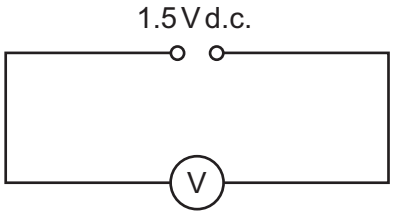

Fig. 1.1

• Record the voltmeter reading *E*.

E = ... [1]

DO NOT WRITE IN THIS MARGIN
DO NOT WRITE IN THIS MARGIN
DO NOT WRITE IN THIS MARGIN
DO NOT WRITE IN THIS MARGIN
DO NOT WRITE IN THIS MARGIN

(b) You have been provided with a metre rule with a wire attached. You have also been provided with two identical resistors placed in component holders, each labelled R.

- Set up the circuit shown in Fig. 1.2.

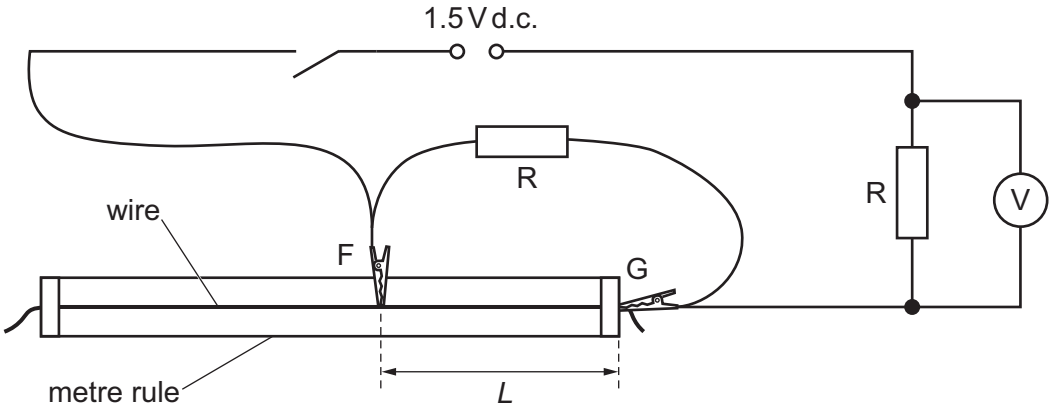

Fig. 1.2

- F and G are crocodile clips.

  The distance between F and G is *L*. Attach F and G to the wire so that *L* is approximately 30 cm.

- Close the switch.

- Record the value of *L* and the voltmeter reading *V*.

  L = ...

  V = ...

- Open the switch.

[1]

DO NOT WRITE IN THIS MARGIN
DO NOT WRITE IN THIS MARGIN
DO NOT WRITE IN THIS MARGIN
DO NOT WRITE IN THIS MARGIN
DO NOT WRITE IN THIS MARGIN

(c) • Write down the value of E from **(a)**.

E = ...

• **Increase** L by changing the position of F on the wire. Record L and V and repeat until you have six sets of values of L and V. Include your values from **(b)**.

Record your results in a table. Include values of $\frac{E - V}{L}$ in your table.

[9]

(d) (i) Plot a graph of $\frac{E - V}{L}$ on the y-axis against V on the x-axis. [3]

(ii) Draw the straight line of best fit. [1]

(iii) Determine the gradient and y-intercept of this line.

gradient = ...

y-intercept = ...

[2]

DO NOT WRITE IN THIS MARGIN

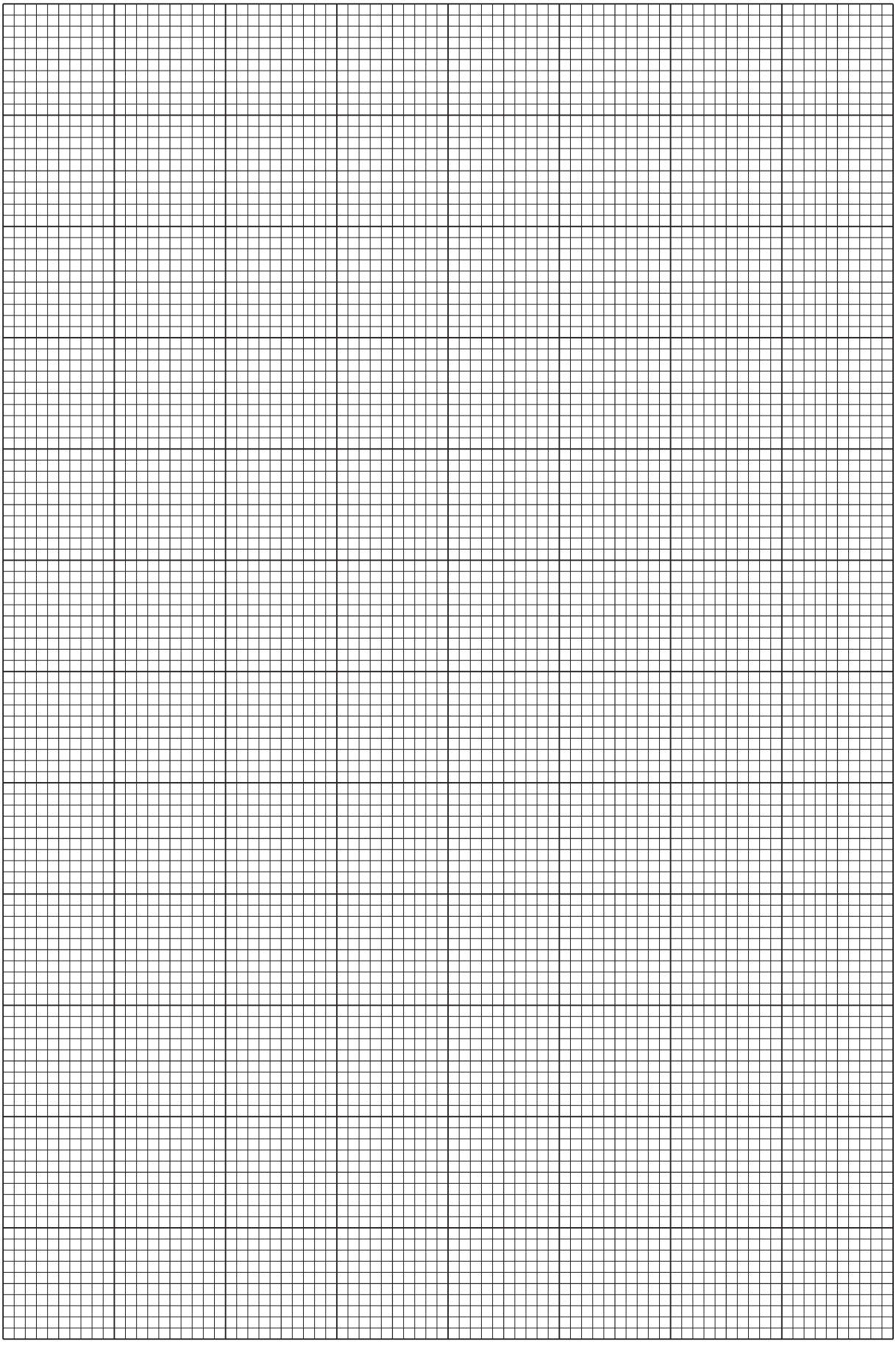

DO NOT WRITE IN THIS MARGIN
DO NOT WRITE IN THIS MARGIN
DO NOT WRITE IN THIS MARGIN
DO NOT WRITE IN THIS MARGIN
DO NOT WRITE IN THIS MARGIN

(e) It is suggested that the quantities V and L are related by the equation

$$\frac{E - V}{L} = PV - Q$$

where P and Q are constants.

Using your answers in **(d)(iii)**, determine the values of P and Q.
Give appropriate units.

P = ...

Q = ...
[2]

(f) The resistance of R is R.

Theory suggests that:

- P and Q are both inversely proportional to R
- the graph cuts the x-axis at a value of $V = \frac{E}{2}$ for all values of R.

A student repeats the experiment using two identical resistors, each with a lower value of R than in the original experiment.

For the student's experiment, draw a second line on the graph to show the expected results.
Label this line W. [1]

[Total: 20]

DO NOT WRITE IN THIS MARGIN
DO NOT WRITE IN THIS MARGIN
DO NOT WRITE IN THIS MARGIN
DO NOT WRITE IN THIS MARGIN
DO NOT WRITE IN THIS MARGIN

You may not need to use all of the materials provided.

2 In this experiment, you will investigate the oscillations of a chain of paper clips.

You have been provided with two spheres of modelling clay.

(a) (i) The diameter of the **smaller** sphere is *d*, as shown in Fig. 2.1.

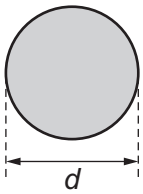

Fig. 2.1

Measure and record *d*.

d = ... [1]

(ii) Estimate the percentage uncertainty in your value of *d*. Show your working.

percentage uncertainty = ...% [1]

DO NOT WRITE IN THIS MARGIN
DO NOT WRITE IN THIS MARGIN
DO NOT WRITE IN THIS MARGIN
DO NOT WRITE IN THIS MARGIN
DO NOT WRITE IN THIS MARGIN

(b) (i) • Set up the apparatus as shown in Fig. 2.2.

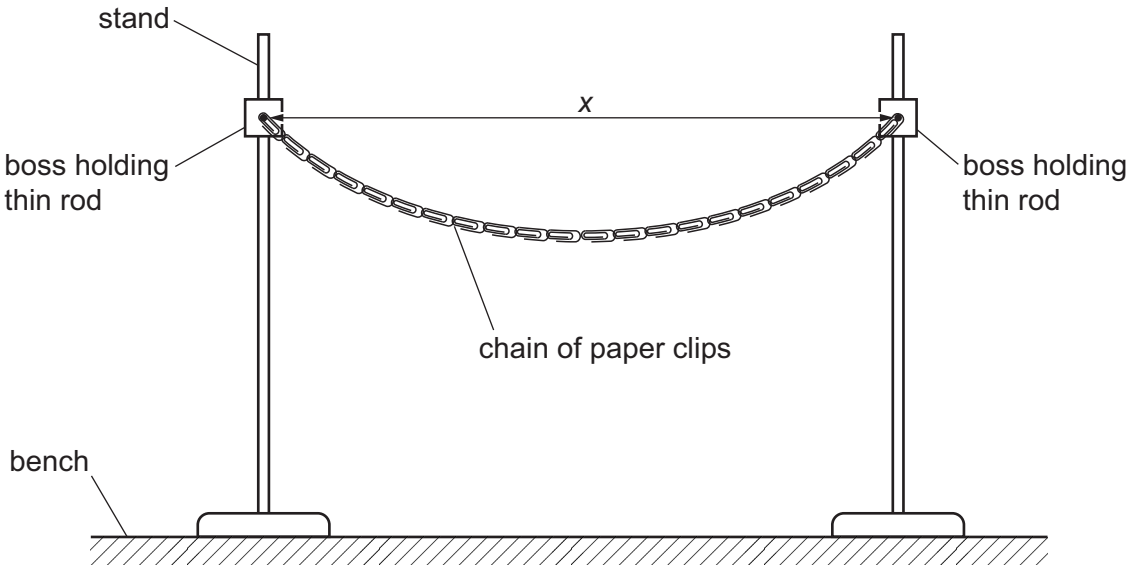

Fig. 2.2

- Ensure that the rods are the same height above the bench.
- Slide the paper clips at the ends of the chain onto the rods.
- The distance between the centres of the rods is *x*.

  Position the stands so that *x* is approximately 70 cm.
- Measure and record *x*.

x = ... cm [1]

DO NOT WRITE IN THIS MARGIN
DO NOT WRITE IN THIS MARGIN
DO NOT WRITE IN THIS MARGIN
DO NOT WRITE IN THIS MARGIN
DO NOT WRITE IN THIS MARGIN

(ii) • Use the hook to attach the **smaller** sphere of modelling clay to the chain of paper clips as shown in Fig. 2.3.

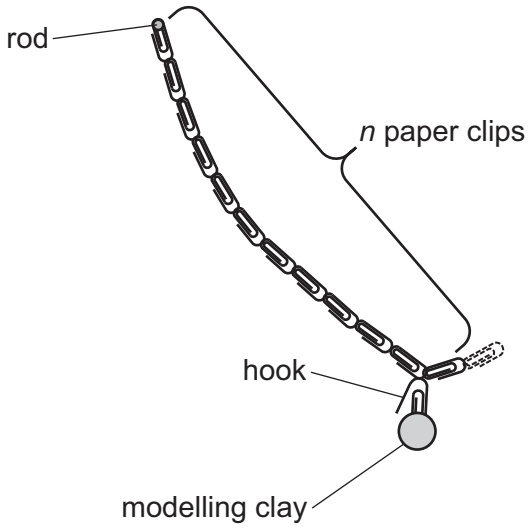

Fig. 2.3

• The number of paper clips between the hook and the end of the chain is n, as shown in Fig. 2.3.

Place the hook so that n is 11.

• Calculate N, where

$$N = \sqrt[3]{n^2}.$$

Give your answer to three significant figures.

N = ... [1]

(c) • Pull the sphere towards you through a short distance. When the sphere is released, it will oscillate.

• Take measurements to determine the period T of these oscillations.

T = ... [2]

DO NOT WRITE IN THIS MARGIN
DO NOT WRITE IN THIS MARGIN
DO NOT WRITE IN THIS MARGIN
DO NOT WRITE IN THIS MARGIN
DO NOT WRITE IN THIS MARGIN

(d) • Roll the two spheres into one larger sphere.

• Measure and record the diameter d of the larger sphere.

d = ...

• Repeat **(b)** and **(c)** with a value x of approximately 80 cm and with the hook placed so that n is 7.

x = ... cm

N = ...

T = ...
[3]

DO NOT WRITE IN THIS MARGIN
DO NOT WRITE IN THIS MARGIN
DO NOT WRITE IN THIS MARGIN
DO NOT WRITE IN THIS MARGIN
DO NOT WRITE IN THIS MARGIN

(e) It is suggested that the relationship between T, d, N and x is

$$T^2 = \frac{kdN}{x^2}$$

where k is a constant.

(i) Using your data, calculate **two** values of k.

first value of k = ...

second value of k = ...

[1]

(ii) Justify the number of significant figures that you have given for your values of k.

.....

.....

..... [1]

(f) It is suggested that the percentage uncertainty in the values of k is 15%.

Using this uncertainty, explain whether your results support the relationship in **(e)**.

.....

.....

.....

..... [1]

DO NOT WRITE IN THIS MARGIN
DO NOT WRITE IN THIS MARGIN
DO NOT WRITE IN THIS MARGIN
DO NOT WRITE IN THIS MARGIN
DO NOT WRITE IN THIS MARGIN

(g) (i) Describe **four** sources of uncertainty or limitations of the procedure for this experiment.

For any uncertainties in measurement that you describe, you should state the quantity being measured and a reason for the uncertainty.

1 .....

.....

2 .....

.....

3 .....

.....

4 .....

.....

[4]

(ii) Describe **four** improvements that could be made to this experiment. You may suggest the use of other apparatus or different procedures.

1 .....

.....

2 .....

.....

3 .....

.....

4 .....

.....

[4]

[Total: 20]

DO NOT WRITE IN THIS MARGIN

DO NOT WRITE IN THIS MARGIN

DO NOT WRITE IN THIS MARGIN

DO NOT WRITE IN THIS MARGIN

DO NOT WRITE IN THIS MARGIN

Permission to reproduce items where third-party owned material protected by copyright is included has been sought and cleared where possible. Every reasonable effort has been made by the publisher (UCLES) to trace copyright holders, but if any items requiring clearance have unwittingly been included, the publisher will be pleased to make amends at the earliest possible opportunity.

To avoid the issue of disclosure of answer-related information to candidates, all copyright acknowledgements are reproduced online in the Cambridge Assessment International Education Copyright Acknowledgements Booklet. This is produced for each series of examinations and is freely available to download at www.cambridgeinternational.org after the live examination series.

Cambridge Assessment International Education is part of Cambridge Assessment. Cambridge Assessment is the brand name of the University of Cambridge Local Examinations Syndicate (UCLES), which is a department of the University of Cambridge.